Volvo 1800S 1963 Wiring Diagram - (Chassis # 6001 to # 8000) Model VB/HB

Wiring Diagram Version: V2.7 Date: March 2023

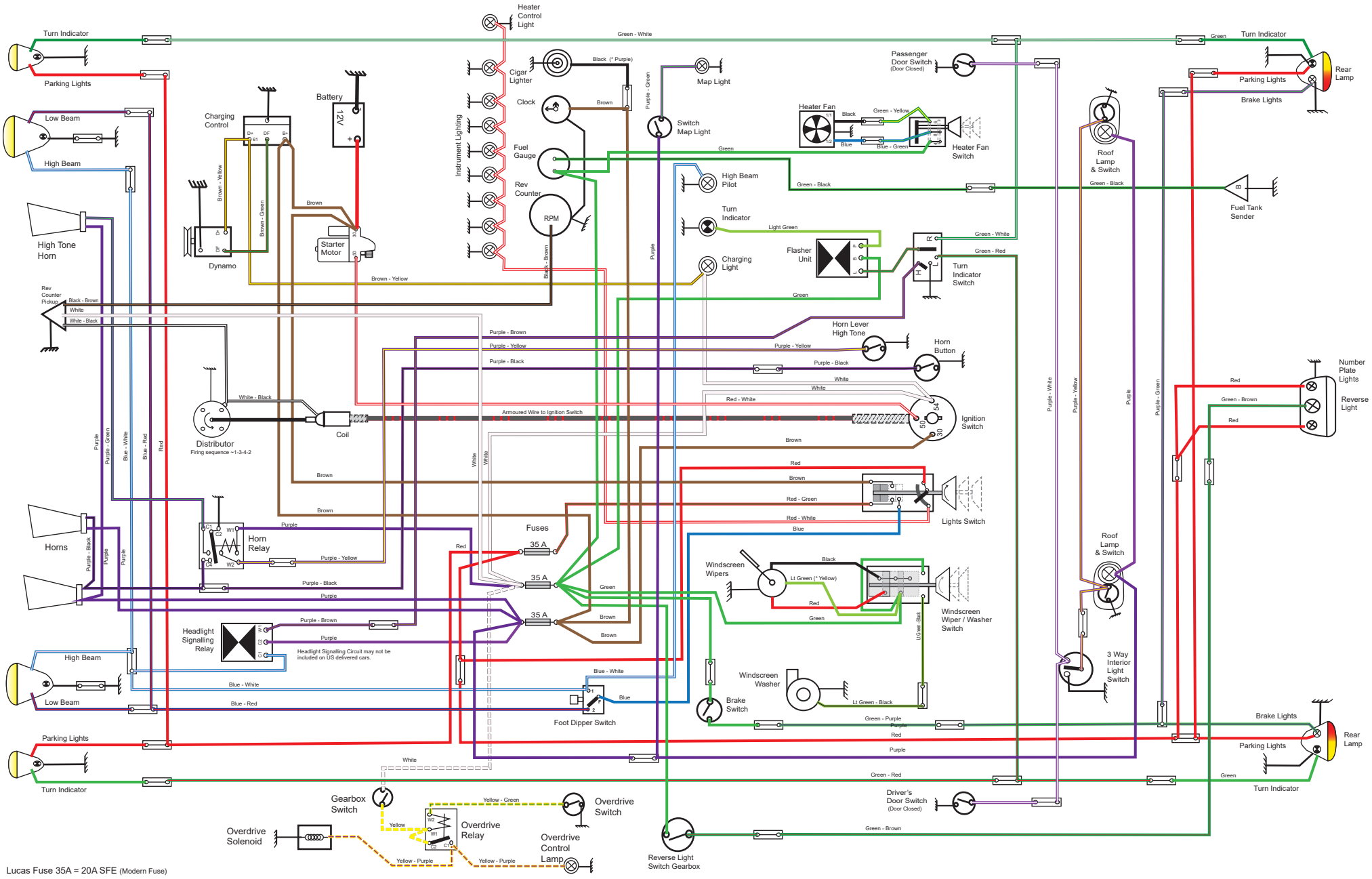

Lucas Fuse 35A = 20A SFE (Modern Fuse)

Artwork by Warren Townsend - Melbourne Australia
Based on original Volvo Schematics of the 1960s & 70s supplemented with current information from the clasic Volvo community.
I have attempted to make these Wiring Diagrams as accurate as possible, however no responsibility is accepted for any consequential errors from their use.
Diagrams will be updated as extra information comes to hand, please check your distribution source for the most recent versions.
I have used Dashed Lines to indicate Optional, or Market Specific Components.
*** In some instances Volvo made mid run production changes, please also reference prevoius, or subsequent year's schematics. ***

Wire Colours marked (*) are from the original Volvo Schematics but differ from the actual colours used - which are shown here (from examples of original cars).